STEEL WORKS

18 Gauge Stainless Steel Three Compartment Sink With One 18" Drainboard On Left

FEATURES

- Made of 18-gauge, 304 stainless steel
- Stainless Steel Legs with Cross bracing
- 1” Adjustable stainless steel bullet feet for added stability
- Faucet holes pre-punched on 8" centers (faucet sold separately)
- 3 1/2" IPS drain connection
- Rolled front and side edges to contain splashes and overflows
- Drain basket included
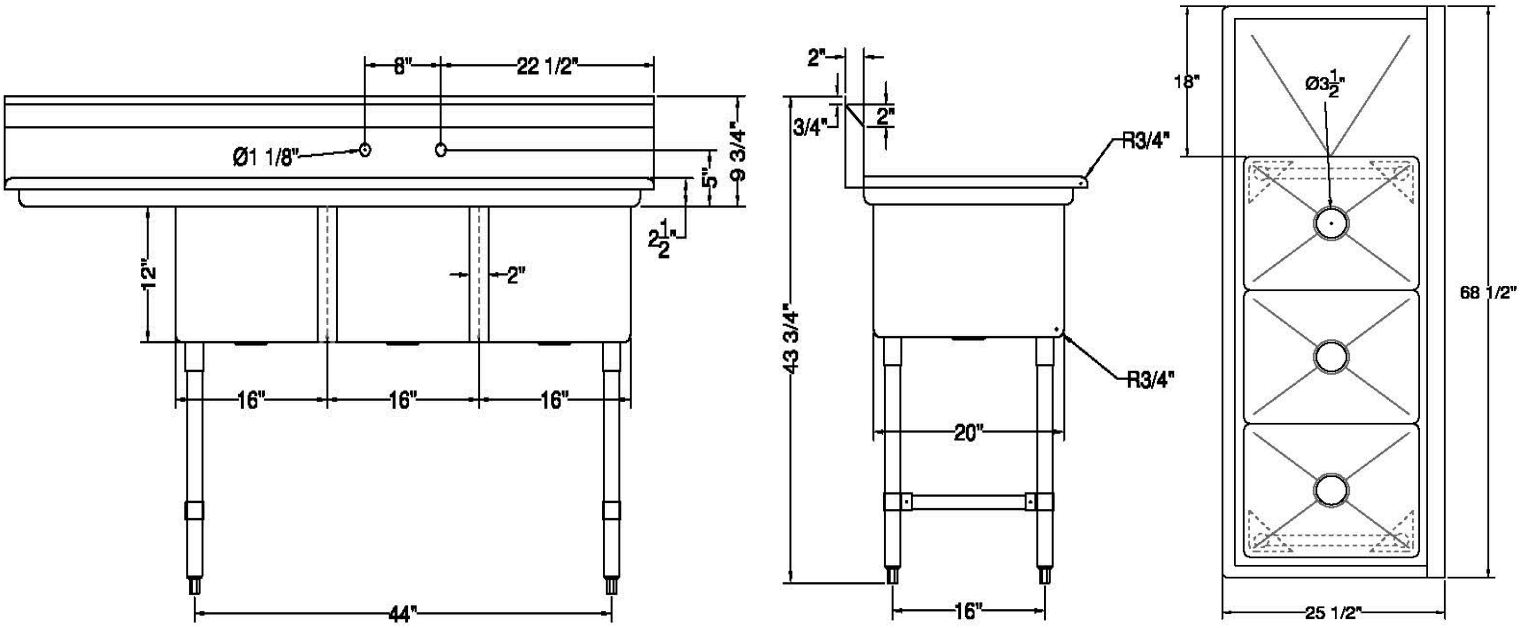
ITEM	LENGTH	DEPTH	HEIGHT (Total)	HEIGHT (Working)	BOWL DEPTH	BOWL L to R	BOWL F to B	NUMBER OF DRAINBOARDS	SIDE	NET WEIGHT
SWS3C162012-18L-318	68 1/2"	25 1/2"	43 1/2"	34"	12"	16"	20"	1	Left	135 LB.