STEEL WORKS

18 Gauge Stainless Steel Blender Station

FEATURES

- Made of 18-gauge, 304 stainless steel
- 1” Adjustable bullet feet for added stability
- 1" IPS drain Included
- The 9"x9"x4" Dump Sink allows for easy cleanup behind the bar
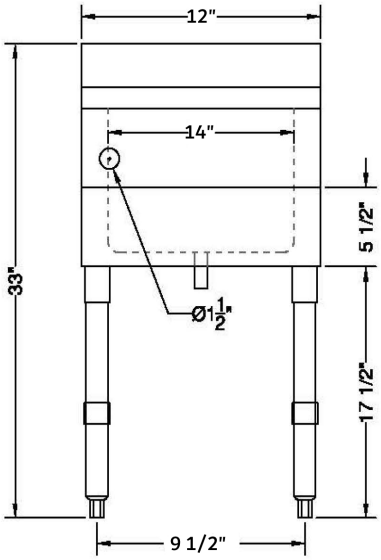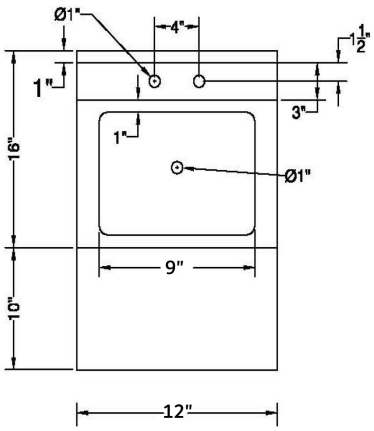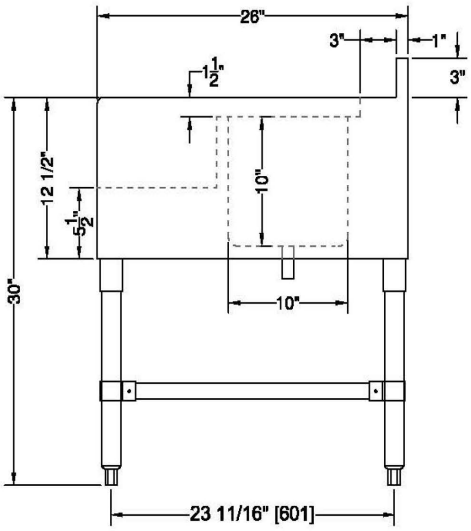
ITEM	LENGTH	DEPTH	HEIGHT (Total)	HEIGHT (Working)	BOWL DEPTH	BOWL WIDTH
SWBSDS-2612	12"	23"	33"	30"	4"	9"